B3000-B BRAINS

Features

- Drop-in replacements for the B3000 *mistic* serial brain
- Compatible with SNAP B-series mounting racks
- Supports four-channel digital modules in rack positions 0-7
- Supports one- and two-channel analog modules in all rack module positions
- Choose from models for *mistic* or Optomux protocols

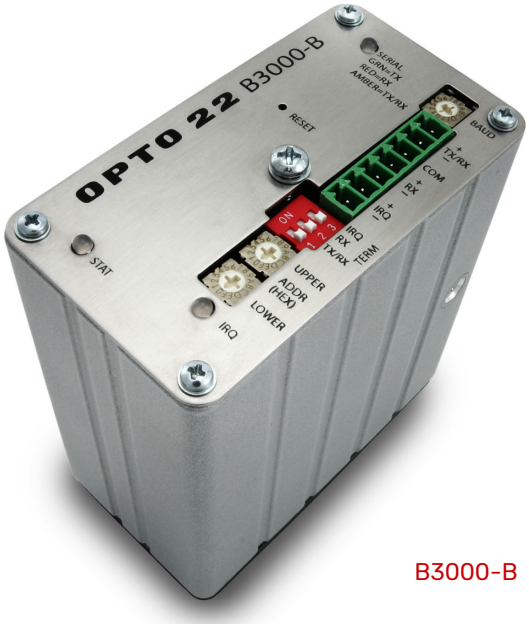

B3000-B

DESCRIPTION

B3000-B brains are serial brains designed as a drop-in replacement for the obsolete B3000. Two models are available:

- Choose the **B3000-B** if you are replacing a B3000 that uses the *mistic* protocol. This model is compatible with FactoryFloor controllers running OptoControl strategies and SNAP B-series mounting racks. The B3000-B has the same functionality as the B3000 but supports *mistic* only.
- Choose the **B3000-B-OMUX** if you are replacing a B3000 that uses the Optomux protocol. This model is compatible with SNAP B-series mounting racks and contains firmware suited for an Optomux system.

From a hardware standpoint the two models are identical, but they contain different firmware. The B3000-B-OMUX has a sticker on its side that identifies its part number. Make sure to order the correct part number for your application.

For more detailed information on the both models, see form 1781, the *B3000-B Serial Brains User's Guide*.

For more information on the earlier B3000 serial brain, see form 0787, the *SNAP Analog/Digital Mistic/Optomux Brain Data Sheet*.

Notes on Migration

The B3000-B can be connected to a SNAP PAC S-series controller, and it can be migrated with other *mistic* I/O units to PAC Project. However, if you are building a new SNAP PAC system with distributed I/O, you should use the SNAP-PAC-SB1 and -SB2 serial brains instead of the B3000-B. The B3000-B can also be used with legacy OptoControl controllers.

For more information on SNAP PAC SB-series brains, see form 1690, the *SNAP PAC Brains User's Guide*.

Part Numbers

Part	Description
B3000-B	*mistic* serial brain designed as a modern drop-in replacement for the B3000
B3000-B-OMUX	Optomux serial brain designed as a modern drop-in replacement for the B3000

MADE IN THE USA

© 2008–2023 Opto 22. All rights reserved. Dimensions and specifications are subject to change. Brand or product names used herein are trademarks or registered trademarks of their respective companies or organizations.

SPECIFICATIONS: B3000-B AND B3000-B-OMUX

Power Requirements	5.0–5.2 VDC at 750 mA maximum (does not include module power requirements)
Operating Temperature	0 to 60 °C
Storage Temperature	-40 to 85 °C
Humidity	0–95% humidity, non-condensing
Communications Interface	RS-485, 2- or 4-wire, twisted pair(s), with shield
Data Rates	300 baud to 230.4 Kbaud
Range: Multidrop	32 stations maximum between repeaters; up to 3000 ft (914 m) between repeaters
LED indicators	SERIAL (transmit/receive), STAT (brain status), IRQ (interrupt)
Options: Switch Selectable	Address Baud rate Binary/ASCII CRC/Checksum
Agency Approvals	CE, DFARS, UKCA

Notes:

1. PID loops do not cross address boundaries.
2. PID loops can be configured only on analog addresses. There is a maximum of 8 PID loops per analog address.
3. Event reactions do not cross address boundaries.

© 2008–2023 Opto 22. All rights reserved. Dimensions and specifications are subject to change. Brand or product names used herein are trademarks or registered trademarks of their respective companies or organizations.

mistic Functions

Digital	Analog
Input latching (10 µsec)	PID loop control
Timing (1 msec resolution)	High/Low limit monitoring
Counting (32 bit)	Thermocouple linearization
Totalizing	Digital filtering
Output timing (1 msec resolution)	Ramping
Pulse generation (1 msec resolution)	Waveform generation
Time proportional output (100 msec minimum period)	Programmable offset and gain
Frequency measurement (up to 20 Khz)	Engineering unit scaling
Event reactions	Square root extraction
Pulse measurement	Event reactions
Period measurement	

© 2008–2023 Opto 22. All rights reserved. Dimensions and specifications are subject to change. Brand or product names used herein are trademarks or registered trademarks of their respective companies or organizations.

LEDS, SWITCHES, AND SERIAL CONNECTOR

The LEDs on the top of a B3000-B or B3000-B-OMUX brain indicate status conditions. For example, the STAT LED blink codes provide useful information during operation and in troubleshooting.

The faceplate's switches allow you to configure the brain's baud rate, termination, and address.

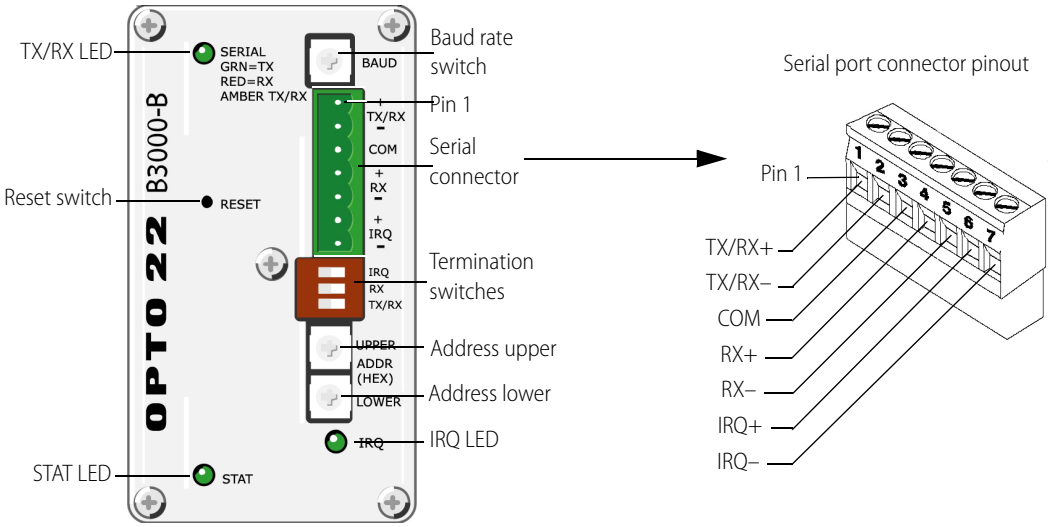

B3000-B

COMPARISON OF DIMENSIONS

B3000-B brains are 0.66 inches (16.64 mm) taller than the B3000.

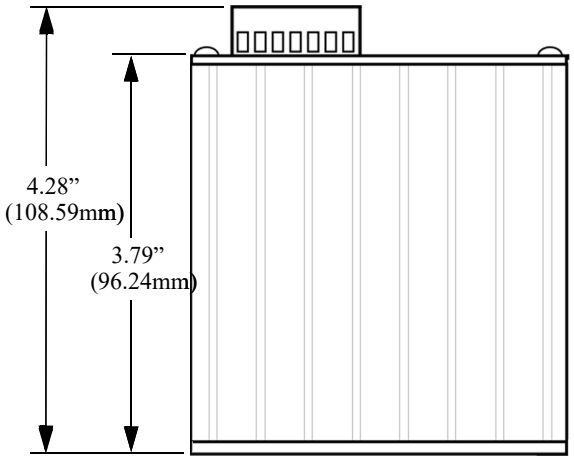

B3000-B

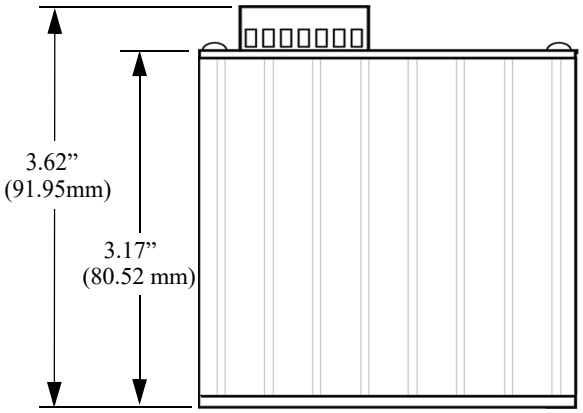

B3000

© 2008–2023 Opto 22. All rights reserved. Dimensions and specifications are subject to change. Brand or product names used herein are trademarks or registered trademarks of their respective companies or organizations.

More about Opto 22

OPTO 22

PRODUCTS

Opto 22 develops and manufactures reliable, easy-to-use, open standards-based hardware and software products. Industrial automation, process control, remote monitoring, data acquisition, and industrial internet of things (IIoT) applications worldwide all rely on Opto 22.

groov RIO®

groov RIO edge I/O offers a single, compact, PoE-powered industrial package with web-based configuration and IIoT software built in, support for multiple OT and IT protocols, and security features like a device firewall, data encryption, and user account control.

Standing alone, *groov* RIO connects to sensors, equipment, and legacy systems, collecting and securely publishing data from field to cloud. Choose a universal I/O model with thousands of possible field I/O configurations, with or without Ignition from Inductive Automation®, or a RIO EMU energy monitoring unit that reports 64 energy data values from 3-phase loads up to 600 VAC, Delta or Wye.

You can even write an IEC 61131-3 compliant control program to run on *groov* RIO, using CODESYS. You can also use *groov* RIO with a Modbus/TCP master or as remote I/O for a *groov* EPIC system.

groov EPIC® System

Opto 22's *groov* Edge Programmable Industrial Controller (EPIC) system gives you industrially hardened control with a flexible Linux®-based processor with gateway functions, guaranteed-for-life I/O, and software for your automation and IIoT applications.

groov EPIC Processor

The heart of the system is the *groov* EPIC processor. It handles a wide range of digital, analog, and serial functions for data collection, remote monitoring, process control, and discrete and hybrid manufacturing.

In addition, the EPIC provides secure data communications among physical assets, control systems, software applications, and online services, both on premises and in the cloud. No industrial PC needed.

Configuring and troubleshooting I/O and networking is easier with the EPIC's integrated high-resolution color touchscreen. Authorized users can manage the system locally on the touchscreen, on a monitor connected via the HDMI or USB ports, or on a PC or mobile device with a web browser.

groov EPIC I/O

groov I/O connects locally to sensors and equipment. Modules have a spring-clamp terminal strip, integrated wireway, swing-away cover, and LEDs indicating module health and discrete channel status. *groov* I/O is hot swappable, UL Hazardous Locations approved, and ATEX compliant.

groov EPIC Software

The *groov* EPIC processor comes ready to run the software you need:

- Programming: Choose flowchart-based PAC Control, CODESYS Development System for IEC61131-3 compliant programs, or secure shell access (SSH) to the Linux OS for custom applications
- Node-RED for creating simple IIoT logic flows from pre-built nodes
- Efficient MQTT data communications with string or Sparkplug data formats
- Multiple OPC UA server options
- HMI: *groov* View to build your own HMI viewable on touchscreen, PCs, and mobile devices; PAC Display for a Windows HMI; Node-RED dashboard UI
- Ignition or Ignition Edge® from Inductive Automation (requires license purchase) with OPC-UA drivers to Allen-Bradley®, Siemens®, and other control systems, and MQTT communications

Older products

From solid state relays, to world-famous G4 and SNAP I/O, to SNAP PAC controllers, older Opto 22 products are still supported and working hard at thousands of installations worldwide. You can count on us for the reliability and service you expect, now and in the future.

QUALITY

Founded in 1974, Opto 22 has established a worldwide reputation for high-quality products. All are made in the U.S.A. at our manufacturing facility in Temecula, California.

Because we test each product twice before it leaves our factory rather than testing a sample of each batch, we can afford to guarantee most solid-state relays and optically isolated I/O modules for life.

FREE PRODUCT SUPPORT

Opto 22's California-based Product Support Group offers free technical support for Opto 22 products from engineers with decades of training and experience. Support is available in English and Spanish by phone or email, Monday–Friday, 7 a.m. to 5 p.m. PST.

Support is always available on our website, including free online training at OptoU, how-to videos, user's guides, the Opto 22 KnowledgeBase, and OptoForums.

PURCHASING OPTO 22 PRODUCTS

Opto 22 products are sold directly and through a worldwide network of distributors, partners, and system integrators. For more information, contact Opto 22 headquarters at **800-321-6786** (toll-free in the U.S. and Canada) or **+1-951-695-3000**, or visit our website at www.opto22.com.

OPTO 22 • www.opto22.com
43044 Business Park Dr. Temecula, CA 92590-3614

SALES • sales@opto22.com
800-321-6786 • 1-951-695-3000

SUPPORT • support@opto22.com
800-835-6786 • 1-951-695-3080

MADE IN THE USA

© 2001–2022 Opto 22. All rights reserved. Dimensions and specifications are subject to change. Brand or product names used herein are trademarks or registered trademarks of their respective companies or organizations.
Form 1335-230802